NAVIA 20
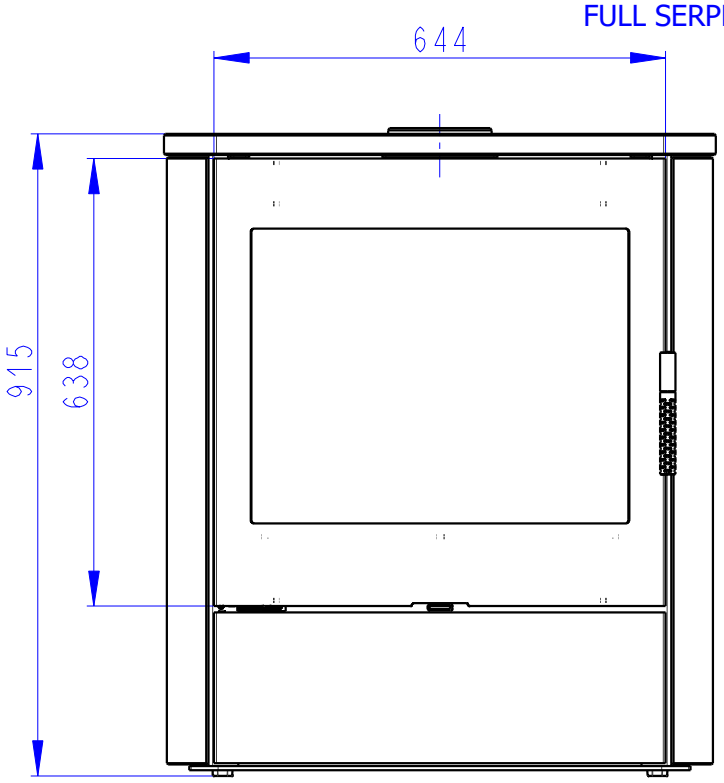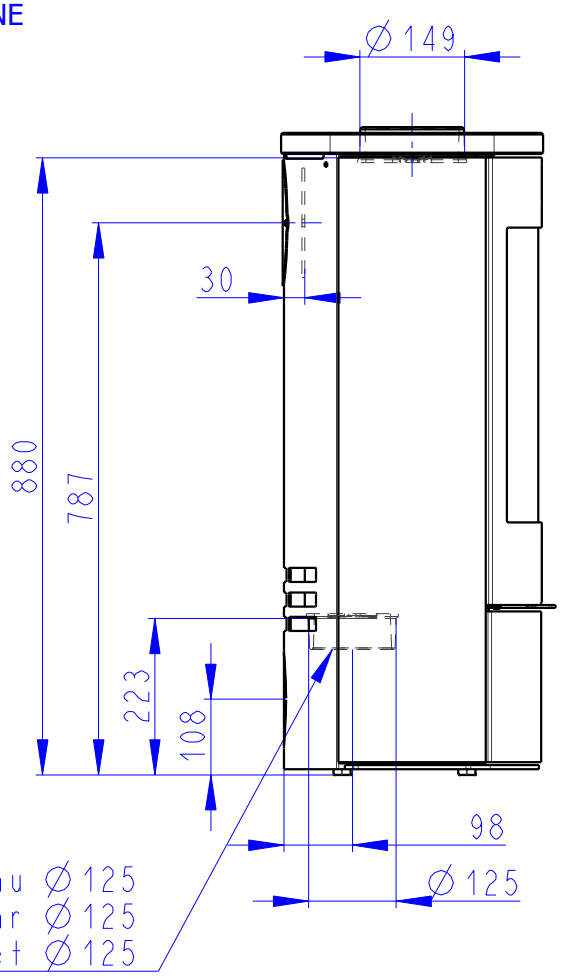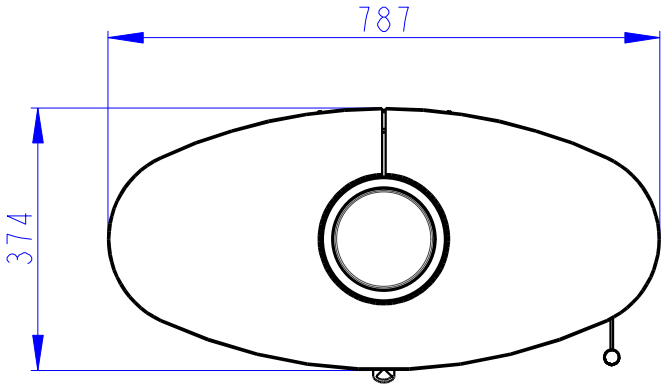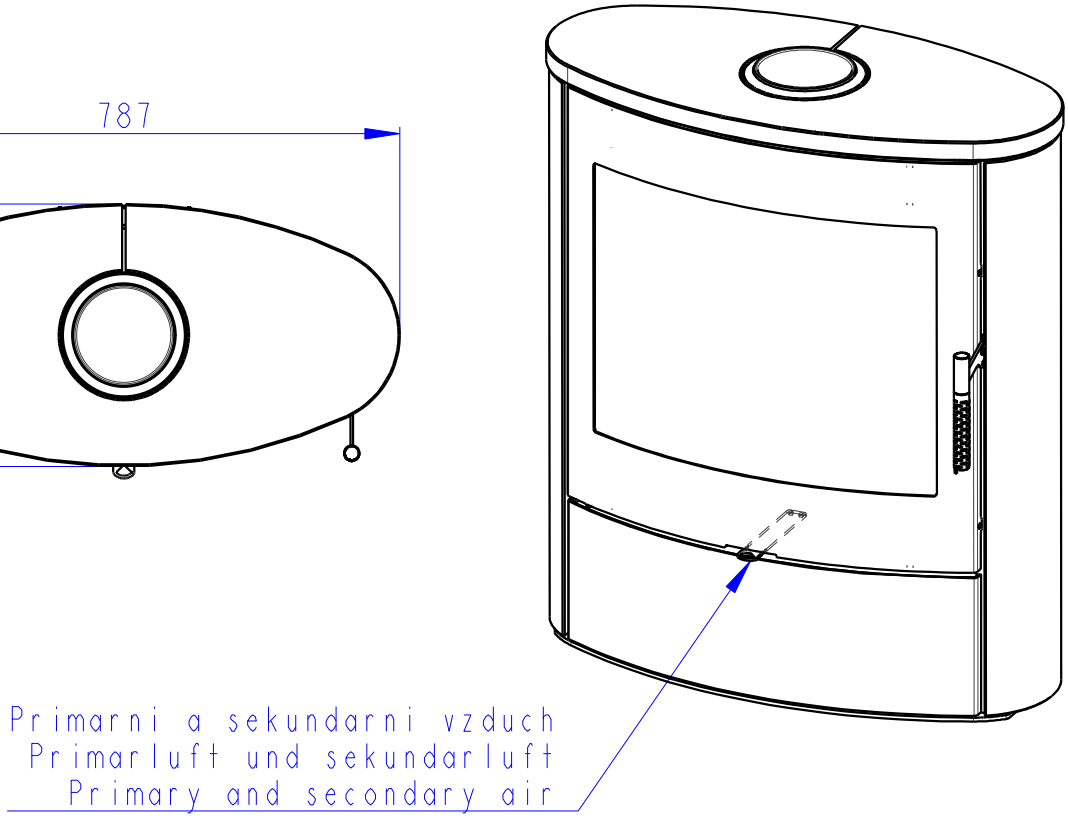
SERPENTIN
SERPENTINO KOMPLETT
FULL SERPENTINE